Fabricate.

PRODUCT CATALOGUE

Tankerton Works,
12 Argyle Walk,
London, WC1H 8HA

www.fabricate.lighting
info@fabricate.lighting
T: 020 3869 1530

LIGHT LINE RECTANGULAR

FEATURES

- Fully homogeneous and uniform diffuser appearance.
- Connect or abut fixtures with seamless light.
- Stainless steel, aluminium, brass and copper finishes.
- Range of light outputs available.
- Surface mounted, flush recessed and plaster-in variations.
- 50,000+ hours life expectancy.
- 5V, 12V, 24V and 48V variants available to suit the project.
- IP44 up to IP68 protection available.
- Range of first-fix installation channels.
- Straight lengths and custom curves.
- Diffuser customisations and optics available.
- Wide selection of controls options.
- Luminaire efficacy average 70 lm/W.
- Available in 50mm/100mm increments.

TECHNICAL INFO

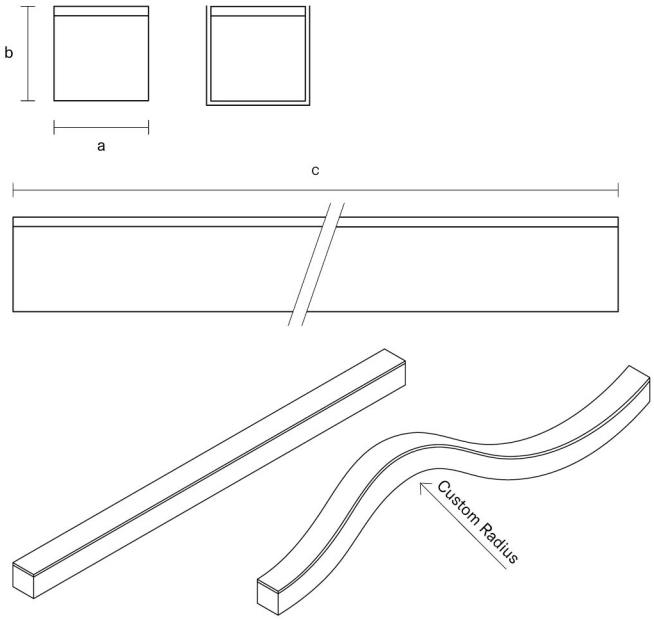

EXAMPLE ORDER CODE

FAB-LI-P-10-25-100-9.6-44-2700-FA-RA-CL-SWITCHED

DIM A	DIM B	DIM C	OUTPUT	IP RATING	LIGHT COLOUR	DIFFUSER	FINISH	MOUNTING	CONTROL
10	25	100	9.6	44	2700	Frosted Acrylic - FA	Raw Aluminium - RA	Clips - CL	Switched
13	18	200	14	65	3000	Dark Acrylic - DA	Anodised Silver - AS	Recessed Channel - RC	Dali
16	21	300	18	67	4000	Opal Glass - OG	Anodised Black - AB	Suspended - S	DMX
19	24	500		68	5000		Anodised Colour - ARAL	Magnetic Pads - MG	Art-Net
25	30	1000			RGB		Powder Coat White - PW	In-ground - ING	Fab Content
30	35	1500			RGBW		Powder Coat Black - PB		
40	45	2000			RGBWW		Powder Coat Colour - PRAL		
50	55	2500			RGBCW/WW		Stainless Steel - SS		
76	61	3000					Brass - BR		
75	43						Copper - CO		
102	56								
SITE	SITE	SITE							

Tankerton Works,
12 Argyle Walk,
London, WC1H 8HA

Fabricate.

www.fabricate.lighting
info@fabricate.lighting
T: 020 3869 1530

LIGHT LINE ROUND

FEATURES

- Fully homogeneous and uniform diffuser appearance.
- Connect or abut fixtures with seamless light.
- Stainless steel, aluminium, brass and copper finishes.
- Range of light outputs available.
- Surface mounted, flush recessed and plaster-in variations.
- 50,000+ hours life expectancy.
- 5V, 12V, 24V and 48V variants available to suit the project.
- IP44 up to IP68 protection available.
- Range of first-fix installation channels.
- Straight lengths and custom curves.
- Diffuser customisations and optics available.
- Wide selection of controls options.
- Luminaire efficacy average 70 lm/W.
- Available in 50mm/100mm increments.

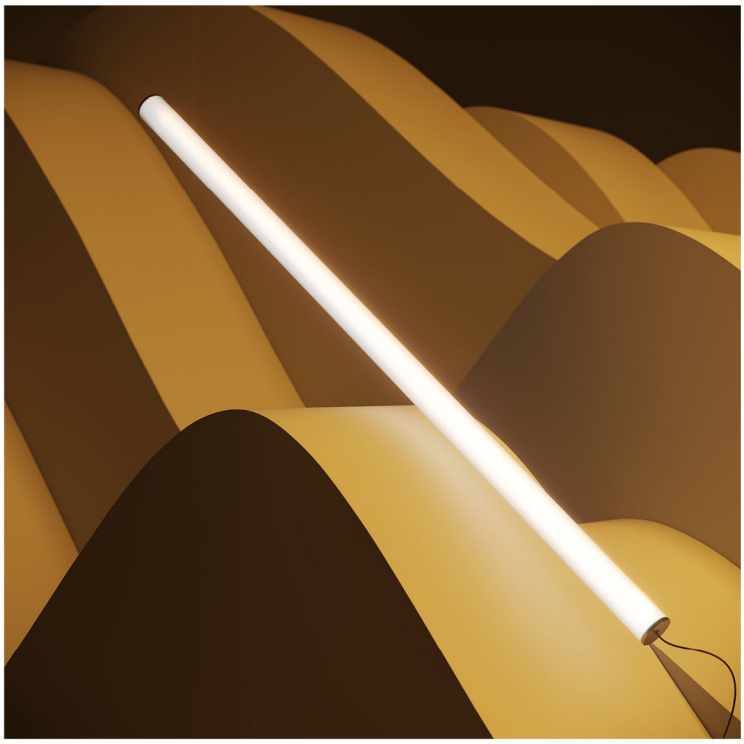

TECHNICAL INFO

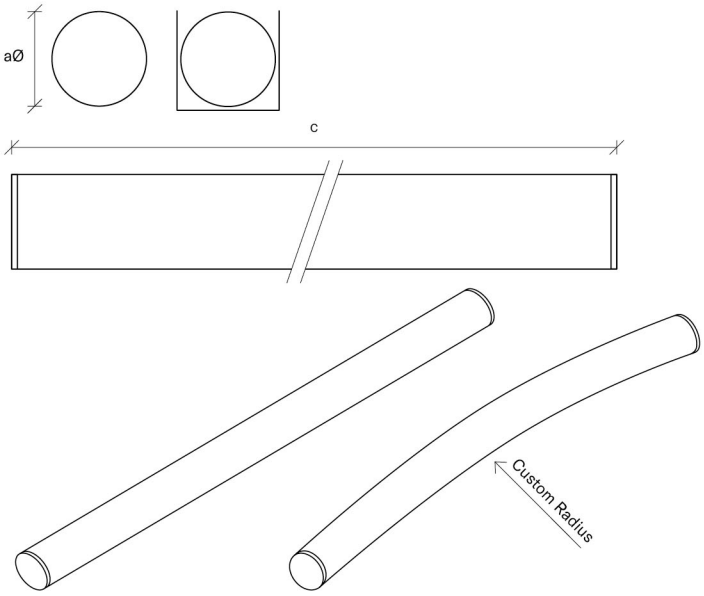

EXAMPLE ORDER CODE

FAB-LI-ROU-40-100-9.6-44-2700-OA-RA-CL-SWITCHED

DIM A	DIM C	OUTPUT	IP RATING	LIGHT COLOUR	DIFFUSER	ENDCAPS FINISH	MOUNTING	CONTROL
40	100	9.6	44	2700	Opal Acrylic - OA	Raw Aluminium - RA	Clips - CL	Switched
50	150	14	65	3000	Dark Acrylic - DA	Anodised Silver - AS	Recessed Channel - RC	Dali
60	200	18	67	4000		Anodised Black - AB	Suspended - S	DMX
70	250		68	5000		Anodised Colour - ARAL	In-ground - ING	Art-Net
80	300			RGB		Powder Coat White - PW		Fab Content
90	350			RGBW		Powder Coat Black - PB		
100	400			RGBWW		Powder Coat Colour - PRAL		
120	500			RGBCW/WW		Stainless Steel - SS		
150	1000					Brass - BR		
160	1500					Copper - CO		
200	2000							
250	2500							
	3000							
SITE	SITE							

Tankerton Works,
12 Argyle Walk,
London, WC1H 8HA

Fabricate.

www.fabricate.lighting
info@fabricate.lighting
T: 020 3869 1530

LIGHT LINE
RAIL ROUND

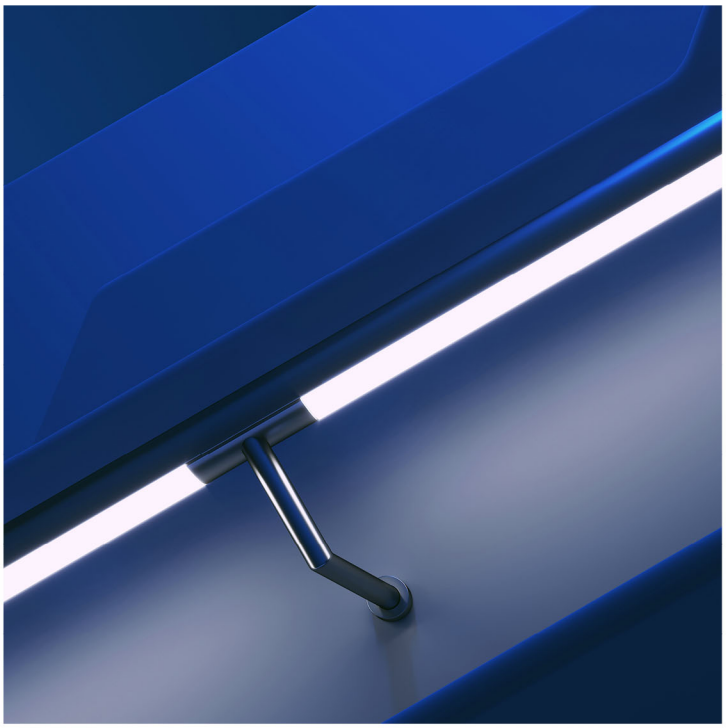

FEATURES

- Handrail system with flexible fixing solutions.
- Stainless steel, aluminium, timber and leather finishes.
- Fully homogeneous and uniform diffuser appearance.
- Range of light outputs available.
- 50,000+ hours life expectancy.
- Emergency lighting with 3 hour operation.
- 5V, 12V, 24V and 48V variants available to suit the project.
- IP44 up to IP65 protection available.
- Straight lengths and custom curves.
- Wide selection of controls options.
- Luminaire efficacy average 70 lm/W

TECHNICAL INFO

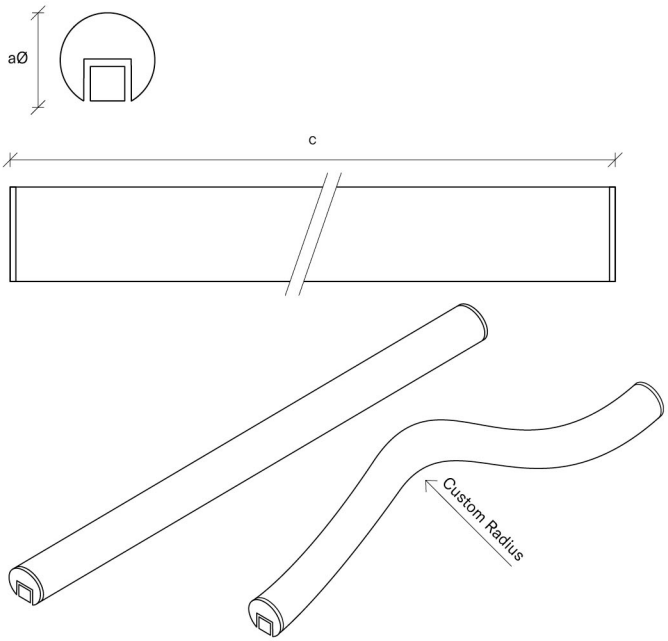

EXAMPLE ORDER CODE

FAB-LI-RAIL-ROU-42.4-500-SS-9.6-44-2700-FA-RA-BL-SWITCHED

DIM A	DIM C	TYPE	OUTPUT	IP RATING	LIGHT COLOUR	DIFFUSER	FINISH	MOUNTING	CONTROL
42.4	500	SS	9.6	44	2700	Frosted Acrylic - FA	Raw Aluminium - RA	Ballustrade - BL	Switched
48.3	1000	OAK	14	65	3000	Dark Arcrylic - DA	Anodised Silver - AS	Wall Mounted - WM	Dali
60.3	1500	BEECH	18		4000		Anodised Black - AB		DMX
	2000	ALU			5000		Anodised Colour - ARAL		Art-Net
	2500				RGBW		Powder Coat White - PW		Fab Content
	5000				RGBW		Powder Coat Black - PB		
SITE	SITE	SITE			RGBWW		Powder Coat Colour - PRAL		
					RGBCW/WW		Stainless Steel - SS		
							Oak - OA		
							Beech - BE		

Tankerton Works,
12 Argyle Walk,
London, WC1H 8HA

Fabricate.

www.fabricate.lighting
info@fabricate.lighting
T: 020 3869 1530

LIGHT LINE
RAIL RECTANGULAR

FEATURES

- Handrail system with flexible fixing solutions.
- Stainless steel, aluminium, timber and leather finishes.
- Fully homogeneous and uniform diffuser appearance.
- Range of light outputs available.
- 50,000+ hours life expectancy.
- Emergency lighting with 3 hour operation.
- 5V, 12V, 24V and 48V variants available to suit the project.
- IP44 up to IP65 protection available.
- Straight lengths and custom curves.
- Wide selection of controls options.
- Luminaire efficacy average 70 lm/W

TECHNICAL INFO

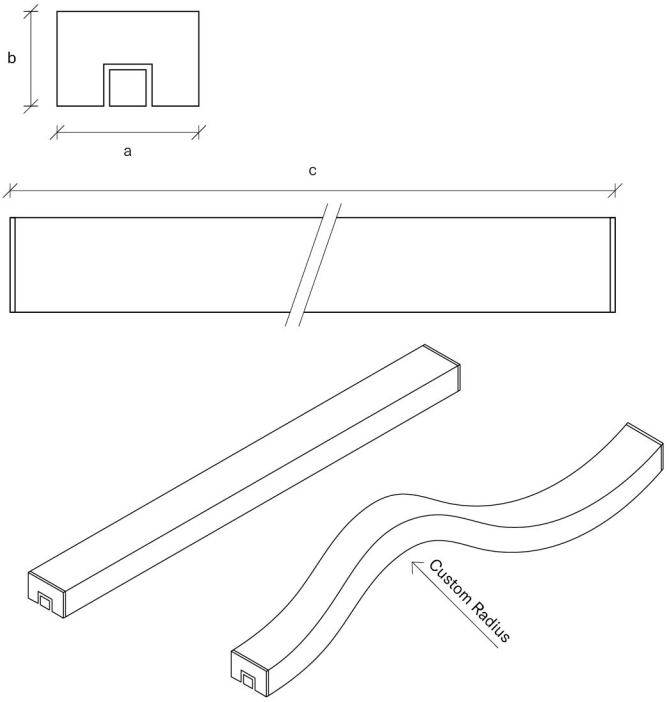

EXAMPLE ORDER CODE

FAB-LI-RAIL-REC-40-40-500-9.6-SS-44-2700-FA-RA-BL-SWITCHED

DIM A	DIM B	DIM C	OUTPUT	TYPE	IP RATING	LIGHT COLOUR	DIFFUSER	FINISH	MOUNTING	CONTROL
40	40	500	9.6	SS	44	2700	Frosted Acrylic - FA	Raw Aluminium - RA	Ballustrade - BL	Switched
60	40	1000	14	OAK	65	3000	Dark Acrylic - DA	Anodised Silver - AS	Wall Mounted - WM	Dali
		1500	18	BEECH		4000		Anodised Black - AB		DMX
		2000		ALU		5000		Anodised Colour - ARAL		Art-Net
		2500				RGB		Powder Coat White - PW		Fab Content
		5000				RGBW		Powder Coat Black - PB		
SITE	SITE	SITE		SITE		RGBWW		Powder Coat Colour - PRAL		
						RGBCW/WW		Stainless Steel - SS		
								Oak - OA		
								Beech - BE		

Tankerton Works,
12 Argyle Walk,
London, WC1H 8HA

Fabricate.

www.fabricate.lighting
info@fabricate.lighting
T: 020 3869 1530

SURFACES
LIGHTBOX RECTANGULAR

FEATURES

- Fully homogeneous and uniform diffuser appearance.
- Connect or abut fixtures with seamless light.
- Stainless steel, aluminium, brass and copper finishes.
- Range of light outputs available.
- Surface mounted, flush recessed and plaster-in variations.
- 50,000+ hours life expectancy.
- IP44 up to IP68 protection available.
- Diffuser customisations and optics available.
- Wide selection of controls options.
- Luminaire output up to 10,000 lm/m2.

TECHNICAL INFO

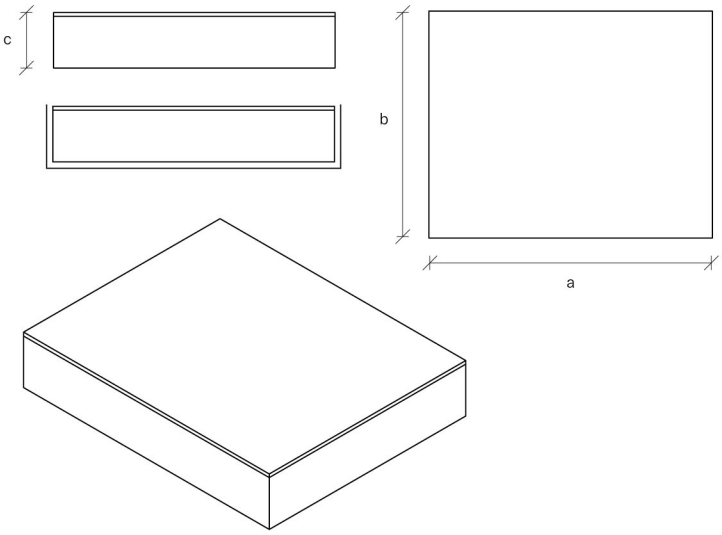

EXAMPLE ORDER CODE

FAB-B-REC-100-100-50-55-40-2700-FA-RA-CL-SWITCHED

DIM A	DIM B	DIM C	OUTPUT	IP RATING	LIGHT COLOUR	DIFFUSER	FINISH	MOUNTING	CONTROL
Min 100	Min 100	Min 50	55	44	2700	Frosted Acrylic - FA	Raw Aluminium - RA	Clips - CL	Switched
500	500	80	110	65	3000	Dark Acrylic - DA	Anodised Silver - AS	Recessed Box - RB	Dali
1000	100	100	165	67	4000	Opal Glass - OG	Anodised Black - AB	Suspended - S	DMX
Max 1200	Max 3000	100		68	5000		Anodised Colour - ARAL	In-ground - ING	Art-Net
					RGB		Powder Coat White - PW		Fab Content
SITE	SITE	SITE			RGBW		Powder Coat Black - PB		
					RGBWW		Powder Coat Colour - PRAL		
					RGBCW/WW		Stainless Steel - SS		
							Brass - BR		
							Copper - CO		

Tankerton Works,
12 Argyle Walk,
London, WC1H 8HA

Fabricate.

www.fabricate.lighting
info@fabricate.lighting
T: 020 3869 1530

SURFACES
LIGHTBOX ROUND

FEATURES

- Fully homogeneous and uniform diffuser appearance.
- Connect or abut fixtures with seamless light.
- Stainless steel, aluminium, brass and copper finishes.
- Range of light outputs available.
- Surface mounted, flush recessed and plaster-in variations.
- 50,000+ hours life expectancy.
- IP44 up to IP68 protection available.
- Diffuser customisations and optics available.
- Wide selection of controls options.
- Luminaire output up to 10,000 lm/m2.

TECHNICAL INFO

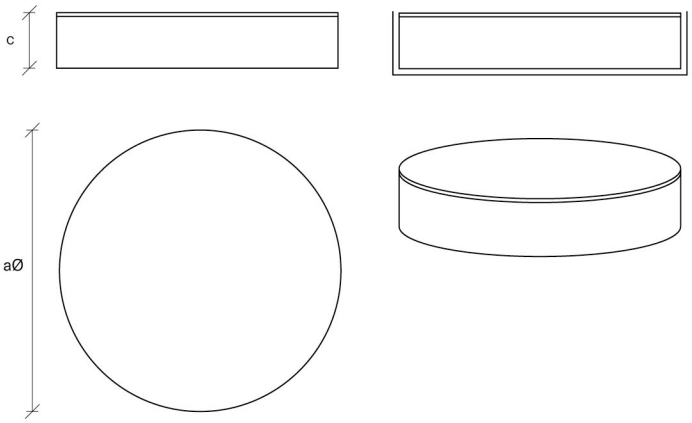

EXAMPLE ORDER CODE

FAB-B-ROU-100-50-55-44-2700-FA-RA-CL-SWITCHED

DIM A	DIM C	OUTPUT	IP RATING	LIGHT COLOUR	DIFFUSER	FINISH	MOUNTING	CONTROL
Min 100	Min 50	55	44	2700	Frosted Acrylic - FA	Raw Aluminium - RA	Clips - CL	Switched
150	100	110	65	3000	Dark Acrylic - DA	Anodised Silver - AS	Recessed Box - RB	Dali
200	150	165	67	4000	Opal Glass - OG	Anodised Black - AB	Suspended - S	DMX
500	200		68	5000		Anodised Colour - ARAL	In-ground - ING	Art-Net
1000	300			RGB		Powder Coat White - PW		Fab Content
SITE	SITE			RGBW		Powder Coat Black - PB		
				RGBWW		Powder Coat Colour - PRAL		
				RGBCW/WW		Stainless Steel - SS		
						Brass - BR		
						Copper - CO		

Tankerton Works,
12 Argyle Walk,
London, WC1H 8HA

Fabricate.

www.fabricate.lighting
info@fabricate.lighting
T: 020 3869 1530

SURFACES
LIGHTBOX HEXAGONAL

FEATURES

- Fully homogeneous and uniform diffuser appearance.
- Connect or abut fixtures with seamless light.
- Stainless steel, aluminium, brass and copper finishes.
- Range of light outputs available.
- Surface mounted, flush recessed and plaster-in variations.
- 50,000+ hours life expectancy.
- IP44 up to IP68 protection available.
- Diffuser customisations and optics available.
- Wide selection of controls options.
- Luminaire output up to 10,000 lm/m2.

TECHNICAL INFO

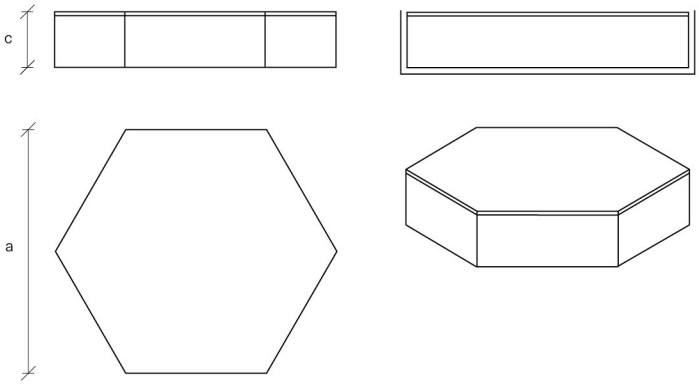

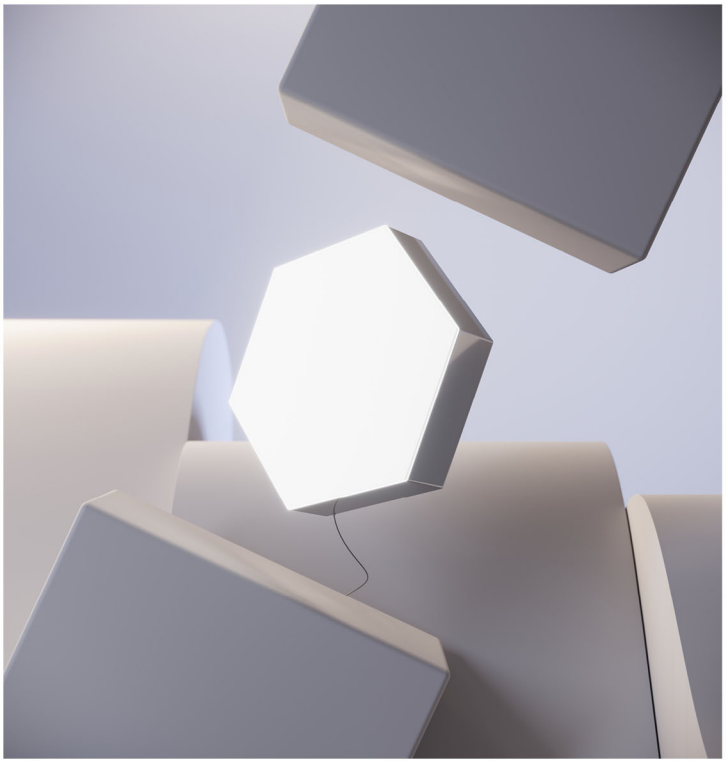

EXAMPLE ORDER CODE

FAB-B-HEX-100-5O-55-44-2700-FA-RA-CL-SWITCHED

DIM A	DIM C	OUTPUT	IP RATING	LIGHT COLOUR	DIFFUSER	FINISH	MOUNTING	CONTROL
Min 100	Min 50	55	44	2700	Frosted Acrylic - FA	Raw Aluminium - RA	Clips - CL	Switched
150	60	110	65	3000	Dark Acrylic - DA	Anodised Silver - AS	Recessed Box - RB	Dali
200	100	165	67	4000	Opal Glass - OG	Anodised Black - AB	Suspended - S	DMX
500	150		68	5000		Anodised Colour - ARAL	In-ground - ING	Art-Net
1000	200			RGB		Powder Coat White - PW		Fab Content
	300			RGBW		Powder Coat Black - PB		
SITE	SITE			RGBWW		Powder Coat Colour - PRAL		
				RGBCW/WW		Stainless Steel - SS		
						Brass - BR		
						Copper - CO		

Tankerton Works,
12 Argyle Walk,
London, WC1H 8HA

Fabricate.

www.fabricate.lighting
info@fabricate.lighting
T: 020 3869 1530

SURFACES
LIGHTBOX CUSTOM

FEATURES

- Customised shape according to your project.
- Fully homogeneous and uniform diffuser appearance.
- Stainless steel, aluminium, brass and copper finishes.
- Range of light outputs available.
- Surface mounted, flush recessed and plaster-in variations.
- 50,000+ hours life expectancy.
- Emergency lighting with 3 hour operation.
- IP44 up to IP68 protection available.
- Diffuser customisations and optics available.
- Wide selection of controls options.
- Luminaire output up to 10,000 lm/m2.

TECHNICAL INFO

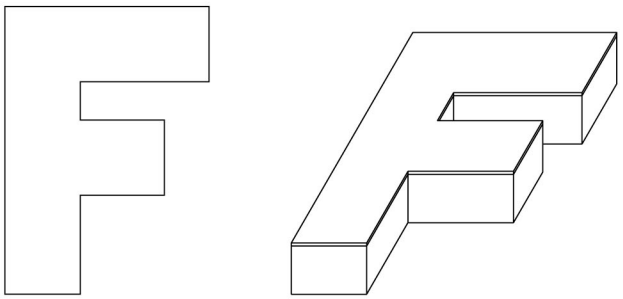

EXAMPLE ORDER CODE

FAB-B-X-SITE-SITE-SITE-55-44-2700-FA-RA-CL-SWITCHED

DIM A	DIM B	DIM C	OUTPUT	IP RATING	LIGHT COLOUR	DIFFUSER	FINISH	MOUNTING	CONTROL
SITE	SITE	SITE	55	44	2700	Frosted Acrylic - FA	Raw Aluminium - RA	Clips - CL	Switched
			110	65	3000	Opal Acrylic - OA	Anodised Silver - AS	Recessed Box - RB	Dali
			165	67	4000	Dark Acrylic - DA	Anodised Black - AB	Suspended - S	DMX
				68	5000	Opal Glass - OG	Anodised Colour - ARAL		Art-Net
					RGB		Powder Coat White - PW		Fab Content
					RGBW		Powder Coat Black - PB		
					RGBWW		Powder Coat Colour - PRAL		
					RBGCW/WW		Stainless Steel - SS		
							Brass - BR		
							Copper - CO		

Tankerton Works,
12 Argyle Walk,
London, WC1H 8HA

Fabricate.

www.fabricate.lighting
info@fabricate.lighting
T: 020 3869 1530

SURFACES
FORM CUBE

FEATURES

- Fully homogeneous and uniform diffuser appearance.
- Connect or abut fixtures with seamless light.
- Range of light outputs available.
- Surface mounted, flush recessed and plaster-in variations.
- 50,000+ hours life expectancy.
- IP40 up to IP68 protection available.
- Diffuser customisations and optics available.
- Wide selection of controls options.
- Luminaire output up to 10,000 lm/m2

TECHNICAL INFO

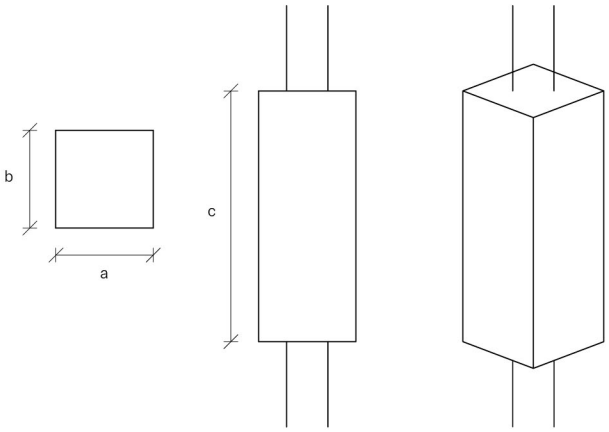

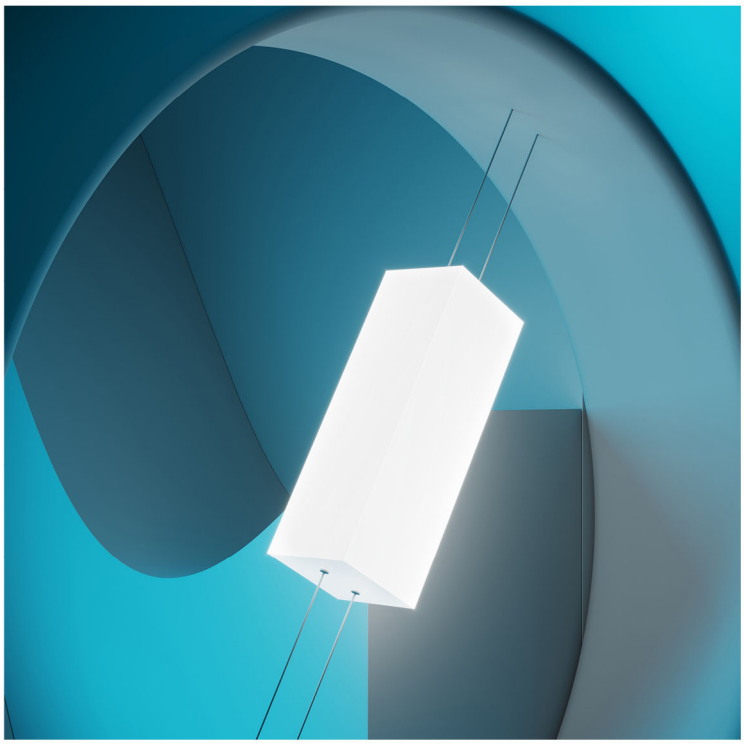

EXAMPLE ORDER CODE

FAB-F-CUB-100-100-100-55-40-2700-FA-CL-SWITCHED

DIM A	DIM B	DIM C	OUTPUT	IP RATING	LIGHT COLOUR	DIFFUSER	MOUNTING	CONTROL
Min 100	Min 100	Min 100	55	40	2700	Frosted Acrylic - FA	Clips - CL	Switched
150	150	200	110	44	3000	Opal Acrylic - OA	Suspended - S	Dali
150	150	200	165	65	3000	Dark Acrylic - DA		Dali
150	150	200		67	4000	Opal Glass - OA		Dali
200	200	300		68	5000			DMX
300	300	400			RGB			Art-Net
1000	1000	1000			RGBW			Fab Content
SITE	SITE	SITE			RGBWW			
					RGBCW/WW			

Tankerton Works,
12 Argyle Walk,
London, WC1H 8HA

Fabricate.

www.fabricate.lighting
info@fabricate.lighting
T: 020 3869 1530

SURFACES
FORM CYLINDER

FEATURES

- Fully homogeneous and uniform diffuser appearance.
- Connect or abut fixtures with seamless light.
- Range of light outputs available.
- Surface mounted, flush recessed and plaster-in variations.
- 50,000+ hours life expectancy.
- IP40 up to IP68 protection available.
- Diffuser customisations and optics available.
- Wide selection of controls options.
- Luminaire output up to 10,000 lm/m2

TECHNICAL INFO

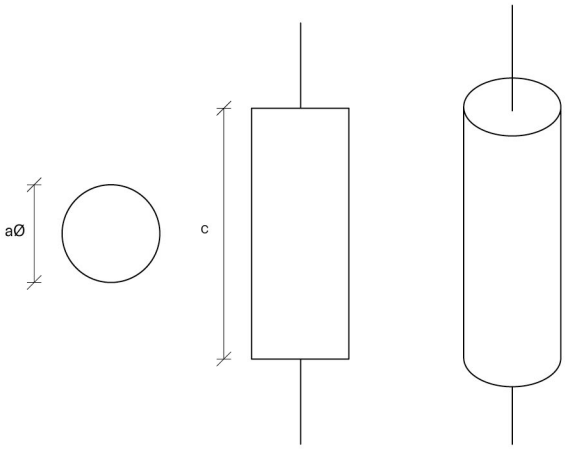

EXAMPLE ORDER CODE

FAB-F-CYL-OD40-100-40-FA-2700-SWITCHED

DIM A	DIM C	IP RATING	DIFFUSER	LIGHT COLOUR	CONTROL
OD 40	100	40	Frosted Acrylic - FA	2700	Switched
OD 50	500	44	Dark Acrylic - DA	3000	Dali
OD 60	1000	65		4000	DMX
OD 70	1500	67		5000	Art-Net
OD 80	2000	68		RGB	Fab Content
OD 90				RGBW	
OD 100				RGBWW	
OD 200				RGBCW/WW	
OD 300					
SITE	SITE				

Tankerton Works,
12 Argyle Walk,
London, WC1H 8HA

Fabricate.

www.fabricate.lighting
info@fabricate.lighting
T: 020 3869 1530

SURFACES
FORM CUSTOM

FEATURES

- Customised shape according to your project.
- Fully homogeneous and uniform diffuser appearance.
- Range of light outputs available.
- Surface mounted, flush recessed and plaster-in variations.
- 50,000+ hours life expectancy.
- Emergency lighting with 3 hour operation.
- IP40 up to IP68 protection available.
- Diffuser customisations and optics available.
- Wide selection of controls options.
- Luminaire output up to 10,000 lm/m2

TECHNICAL INFO

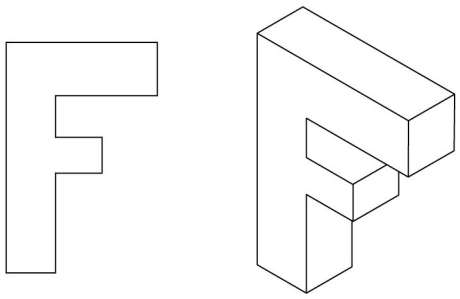

EXAMPLE ORDER CODE

FAB-F-X-SITE-SITE-SITE-55-40-2700-FA-CL-SWITCHED

DIM A	DIM B	DIM C	OUTPUT	IP RATING	LIGHT COLOUR	DIFFUSER	MOUNTING	CONTROL
SITE	SITE	SITE	55	40	2700	Frosted Acrylic - FA	Clips - CL	Switched
			110	44	3000	Opal Acrylic - OA	Suspended - S	Dali
			165	65	4000	Dark Acrylic - DA		DMX
				67	5000	Opal Glass - OG		Art-Net
				68	RGB			Fab Content
					RGBW			
					RGBWW			
					RGBCW/WW			

Tankerton Works,
12 Argyle Walk,
London, WC1H 8HA

Fabricate.

www.fabricate.lighting
info@fabricate.lighting
T: 020 3869 1530

SURFACES
PANEL RECTANGULAR

FEATURES

- Even surface illumination with Fabricate's custom edge-lighting system.
- Acrylic or Tempered glass with a range of glazing and lamination options.
- Stainless steel, aluminium, brass and copper finishes.
- Range of light outputs available.
- Balustrade and channel integration.
- 50,000+ hours life expectancy.
- 5V, 12V, 24V and 48V variants available to suit the project.
- IP40 up to IP68 protection available.
- Diffuser customisations and available.
- Wide selection of controls options.
- Luminaire output up to 5500 lm/m2.

TECHNICAL INFO

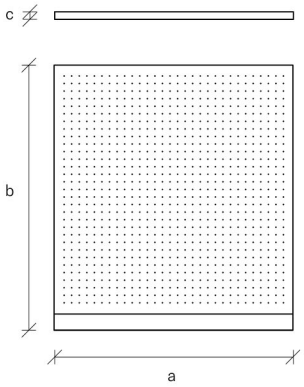

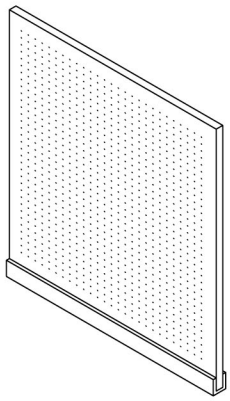

EXAMPLE ORDER CODE

FAB-P-REC-100-100-8-55-40-2700-WHT-RA-CL-SWITCHED

DIM A	DIM B	DIM C	OUTPUT	IP RATING	LIGHT COLOUR	DIFFUSER	FINISH	MOUNTING	CONTROL
100	100	8	55	40	2700	White Dots - WHT	Raw Aluminium - RA	Clips - CL	Switched
300	300	10	110	44	3000	Gold Dots - GLD	Anodised Silver - SA	Recessed Channel - RC	Dali
500	500	12	165	65	4000	Custom Dot Pattern - CDP	Anodised Black - AB	Suspended - S	DMX
1000	1000	12		67	5000		Anodised Colour - ARAL	In-ground - ING	Art-Net
Max 1500	Max 3500	13.5		68	RGB		Powder Coat White - PW		Fab Content
		17.5			RGBW		Powder Coat Black - PB		
		21.5			RGBWW		Powder Coat Colour - PRAL		
SITE	SITE	SITE			RGBCW/WW		Stainless Steel - SS		
							Brass - BR		
							Copper - CO		

Tankerton Works,
12 Argyle Walk,
London, WC1H 8HA

Fabricate.

www.fabricate.lighting
info@fabricate.lighting
T: 020 3869 1530

SURFACES
PANEL ROUND

FEATURES

- Even surface illumination with Fabricate's custom edge-lighting system.
- Acrylic or Tempered glass with a range of glazing and lamination options.
- Stainless steel, aluminium, brass and copper finishes.
- Range of light outputs available.
- Balustrade and channel integration.
- 50,000+ hours life expectancy.
- 5V, 12V, 24V and 48V variants available to suit the project.
- IP40 up to IP68 protection available.
- Diffuser customisations and available.
- Wide selection of controls options.
- Luminaire output up to 5500 lm/m2.

TECHNICAL INFO

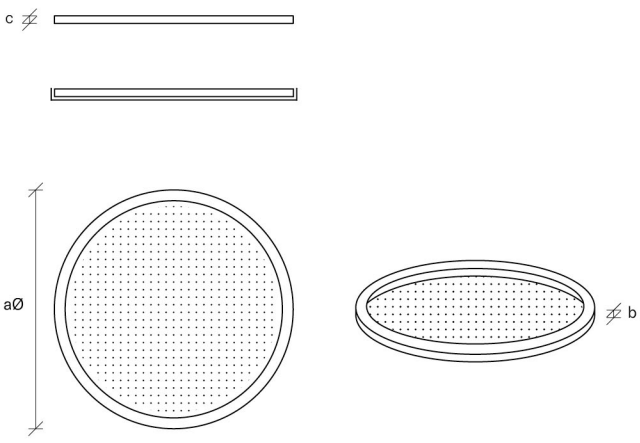

EXAMPLE ORDER CODE

FAB-P-ROU-100-10-8-55-40-2700-WHT-RA-CL-SWITCHED

DIM A	DIM B	DIM C	OUTPUT	IP RATING	LIGHT COLOUR	DIFFUSER	FINISH	MOUNTING	CONTROL
100	Min 10	8	55	40	2700	White Dots - WHT	Raw Aluminium - RA	Clips - CL	Switched
300	20	10	110	44	3000	Gold Dots - GLD	Anodised Silver - AS	Recessed Channel - RC	Dali
500	30	12	165	65	4000	Custom Dot Pattern - CDP	Anodised Black- AB	Suspended - S	DMX
1000	40	15.5		67	5000		Anodised Colour - ARAL	In-ground - ING	Art-Net
Max 2000	50	17.5		68	RGB		Powder Coat White - PW		Fab Content
	100	25.5			RGBW		Powder Coat Black - PB		
SITE	SITE	SITE			RGBWW		Powder Coat Colour - PRAL		
					RGBCW/WW		Stainless Steel - SS		
							Brass - BR		
							Copper - CO		

Tankerton Works,
12 Argyle Walk,
London, WC1H 8HA

Fabricate.

www.fabricate.lighting
info@fabricate.lighting
T: 020 3869 1530

SURFACES
PANEL HEXAGONAL

FEATURES

- Even surface illumination with Fabricate's custom edge-lighting system.
- Acrylic or Tempered glass with a range of glazing and lamination options.
- Stainless steel, aluminium, brass and copper finishes.
- Range of light outputs available.
- Balustrade and channel integration.
- 50,000+ hours life expectancy.
- 5V, 12V, 24V and 48V variants available to suit the project.
- IP40 up to IP68 protection available.
- Diffuser customisations and available.
- Wide selection of controls options.
- Luminaire output up to 5500 lm/m2.

TECHNICAL INFO

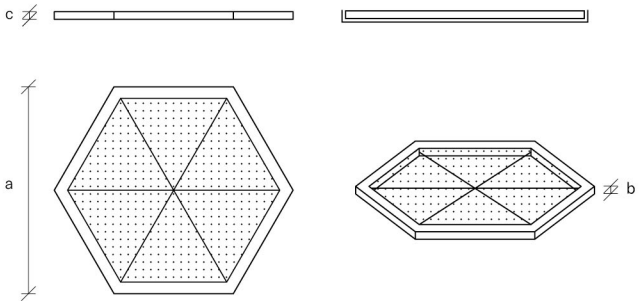

EXAMPLE ORDER CODE

FAB-B-HEX-100-10-8-55-40-2700-WHT-RA-CL-SWITCHED

DIM A	DIM B	DIM C	OUTPUT	IP RATING	LIGHT COLOUR	DIFFUSER	FINISH	MOUNTING	CONTROL
100	Min 10	8	55	40	2700	White Dots - WHT	Raw Aluminium - RA	Clips - CL	Switched
300	20	10	110	44	3000	Gold Dots - GLD	Anodised Silver - AS	Recessed Channel - RC	Dali
500	30	12	165	65	4000	Custom Dot Pattern - CDP	Anodised Black- AB	Suspended - S	DMX
1000	40	15.5		67	5000		Anodised Colour - ARAL	In-ground - ING	Art-Net
Max 2000	50	17.5		68	RGB		Powder Coat White - PW		Fab Content
	100	25.5			RGBW		Powder Coat Black - PB		
SITE	SITE	SITE			RGBWW		Powder Coat Colour - PRAL		
					RGBCW/WW		Stainless Steel - SS		
							Brass - BR		
							Copper - CO		

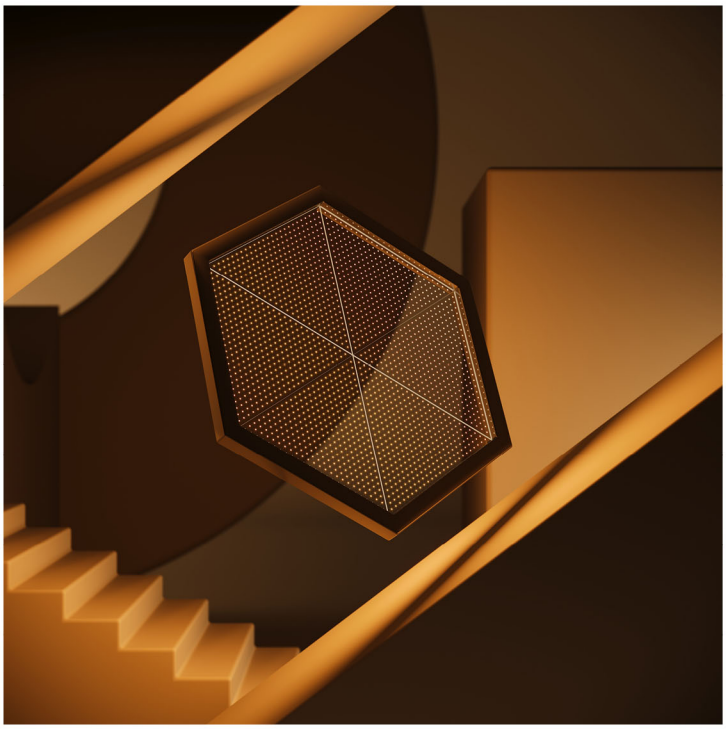

Tankerton Works,
12 Argyle Walk,
London, WC1H 8HA

Fabricate.

www.fabricate.lighting
info@fabricate.lighting
T: 020 3869 1530

STRUCTURES
SHAPE RECTANGULAR

FEATURES

- Fully homogeneous and uniform diffuser appearance.
- Stainless steel, aluminium, brass and copper finishes.
- Range of light outputs available.
- Surface mounted, flush recessed and plaster-in variations.
- 50,000+ hours life expectancy.
- IP44 up to IP68 protection available.
- Diffuser customisations and optics available.
- Wide selection of controls options.

TECHNICAL INFO

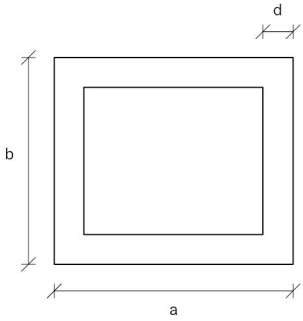

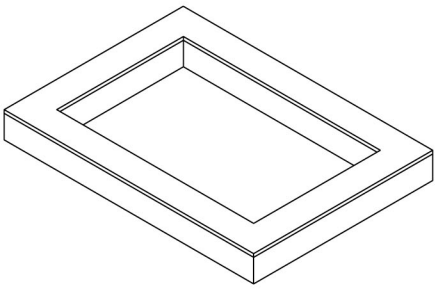

EXAMPLE ORDER CODE

FAB-S-REC-100-100-25-25-55-44-2700-OA-RA-CL-SWITCHED

DIM A	DIM B	DIM C	DIM D	OUTPUT	IP RATING	LIGHT COLOUR	DIFFUSER	FINISH	MOUNTING	CONTROL
100	100	25	25	55	44	2700	Opal Acrylic - OA	Raw Aluminium - RA	Clips - CL	Switched
200	200	31	31	110	65	3000	Dark Acrylic - DA	Anodised Silver - AS	Recessed Box - RB	Dali
300	300	40	40	165	67	4000	Opal Glass - OG	Anodised Black - AB	Suspended - S	DMX
500	500	50	50		68	5000		Anodised Colour - ARAL	In-ground - ING	Art-Net
						RGB		Powder Coat White - PW		Fab Content
SITE	SITE	SITE	SITE			RGBW		Powder Coat Black - PB		
						RGBWW		Powder Coat Colour - PRAL		
						RGBCW/WW		Stainless Steel - SS		
								Brass -BR		
								Copper - CO		

Tankerton Works,
12 Argyle Walk,
London, WC1H 8HA

Fabricate.

www.fabricate.lighting
info@fabricate.lighting
T: 020 3869 1530

STRUCTURES
SHAPE U

FEATURES

- Fully homogeneous and uniform diffuser appearance.
- Stainless steel, aluminium, brass and copper finishes.
- Range of light outputs available.
- Surface mounted, flush recessed and plaster-in variations.
- 50,000+ hours life expectancy.
- IP44 up to IP68 protection available.
- Diffuser customisations and optics available.
- Wide selection of controls options.

TECHNICAL INFO

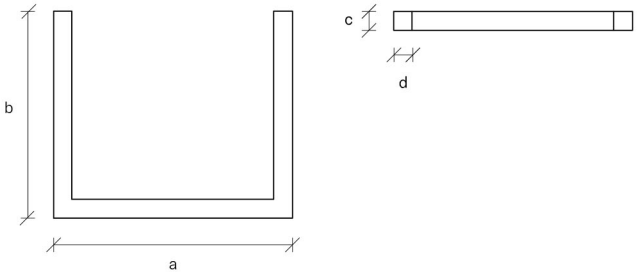

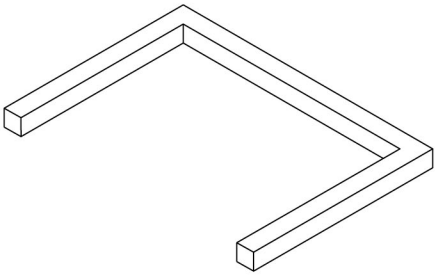

EXAMPLE ORDER CODE

FAB-S-U-100-100-25-25-9.6-44-2700-OA-RA-CL-SWITCHED

DIM A	DIM B	DIM C	DIM D	OUTPUT	IP RATING	LIGHT COLOUR	DIFFUSER	FINISH	MOUNTING	CONTROL
100	100	25	25	9.6	44	2700	Opal Acrylic - OA	Raw Aluminium - RA	Clips - CL	Switched
200	200	31	31	14	65	3000	Dark Acrylic - DA	Anodised Silver - AS	Suspended - S	Dali
300	300	40	40	18	67	4000	Opal Glass - OG	Anodised Black - AB		DMX
500	500	50	50		68	5000		Anodised Colour - ARAL		Art-Net
625	425					RGB		Powder Coat White - PW		Fab Content
SITE	SITE	SITE	SITE			RGBW		Powder Coat Black - PB		
						RGBWW		Powder Coat Colour - PRAL		
						RGBCW/WW		Stainless Steel - SS		
								Brass - BR		
								Copper - CO		

Tankerton Works,
12 Argyle Walk,
London, WC1H 8HA

Fabricate.

www.fabricate.lighting
info@fabricate.lighting
T: 020 3869 1530

STRUCTURES
SHAPE HOOP

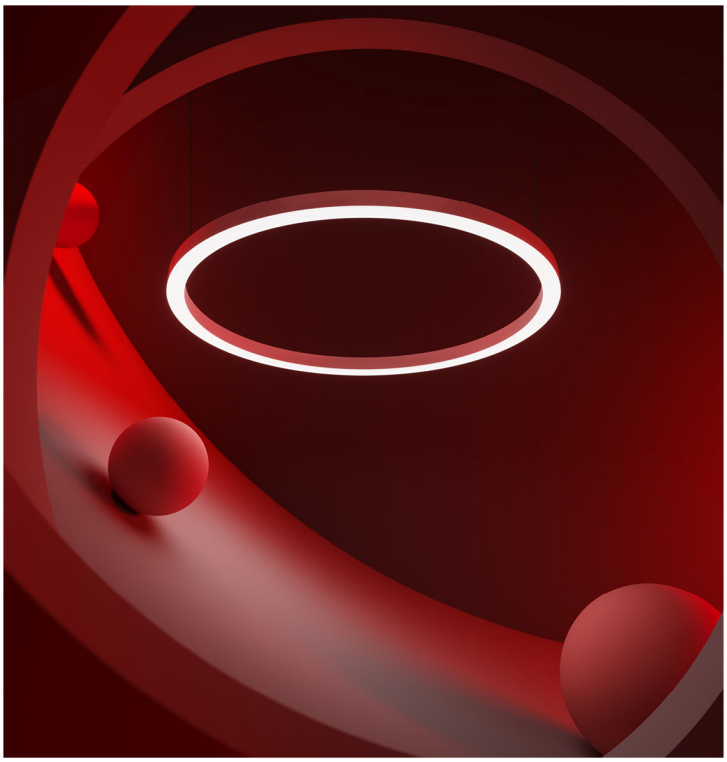

FEATURES

- Fully homogeneous and uniform diffuser appearance.
- Stainless steel, aluminium, brass and copper finishes.
- Range of light outputs available.
- Surface mounted, flush recessed and plaster-in variations.
- 50,000+ hours life expectancy.
- IP44 up to IP68 protection available.
- Diffuser customisations and optics available.
- Wide selection of controls options.

TECHNICAL INFO

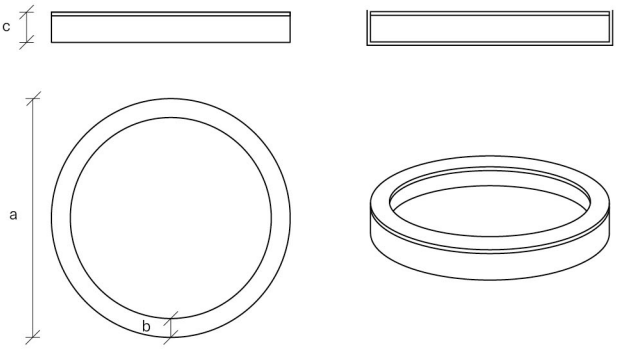

EXAMPLE ORDER CODE

FAB-S-H-OD100-20-50-9.6-44-2700-OA-RA-CL-SWITCHED

DIM A	DIM B	DIM C	OUTPUT	IP RATING	LIGHT COLOUR	DIFFUSER	FINISH	MOUNTING	CONTROL
OD 100	20	25	9.6	44	2700	Opal Acrylic - OA	Raw Aluminium - RA	Clips - CL	Switched
OD 200	30	50	14	65	3000	Dark Acrylic - DA	Anodised Silver - AS	Suspended - S	Dali
OD 300	40	60	18	67	4000	Opal Glass - OG	Anodised Black - AB	In-ground - ING	DMX
OD 400	50	70		68	5000		Anodised Colour - ARAL		Art-Net
OD 500	60	80			RGB		Powder Coat White - PW		Fab Content
OD 1000	70	90			RGBW		Powder Coat Black - PB		
		100			RGBWW		Powder Coat Colour - PRAL		
SITE	SITE	SITE			RGBCW/WW		Stainless Steel - SS		
							Brass - BR		
							Copper - CO		

Tankerton Works,
12 Argyle Walk,
London, WC1H 8HA

Fabricate.

www.fabricate.lighting
info@fabricate.lighting
T: 020 3869 1530

STRUCTURES
SCULPTURE CUBE

FEATURES

- Fully homogeneous and uniform diffuser appearance.
- Stainless steel, aluminium, brass and copper finishes.
- Range of light outputs available.
- Surface mounted, flush recessed and plaster-in variations.
- 50,000+ hours life expectancy.
- IP40 up to IP66 protection available.
- Diffuser customisations and optics available.
- Wide selection of controls options.

TECHNICAL INFO

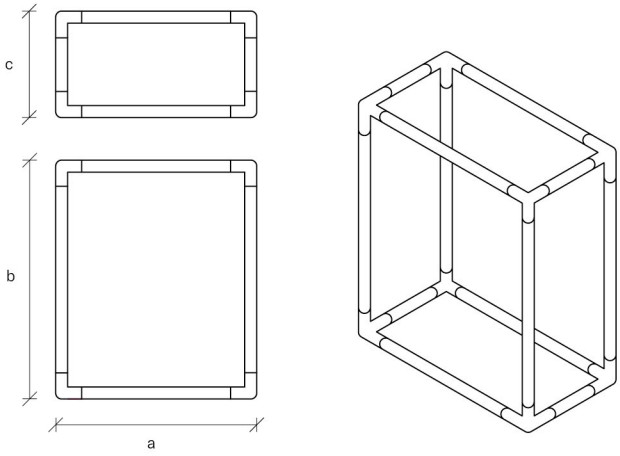

EXAMPLE ORDER CODE

FAB-S-CUB-500-500-100-40-2700-SWITCHED

DIM A	DIM B	DIM C	IP RATING	LIGHT COLOUR	CONTROL
500	500	100	40	2700	Switched
1000	1000	200	44	3000	Dali
1500	1500	300	64	4000	DMX
2000	2000	400	65	5000	Art-Net
2500	2500	500	66	RGB	Fab Content
3000	3000	3000		RGBW	
SITE	SITE	SITE		RGBWW	
				RGBCW/WW	

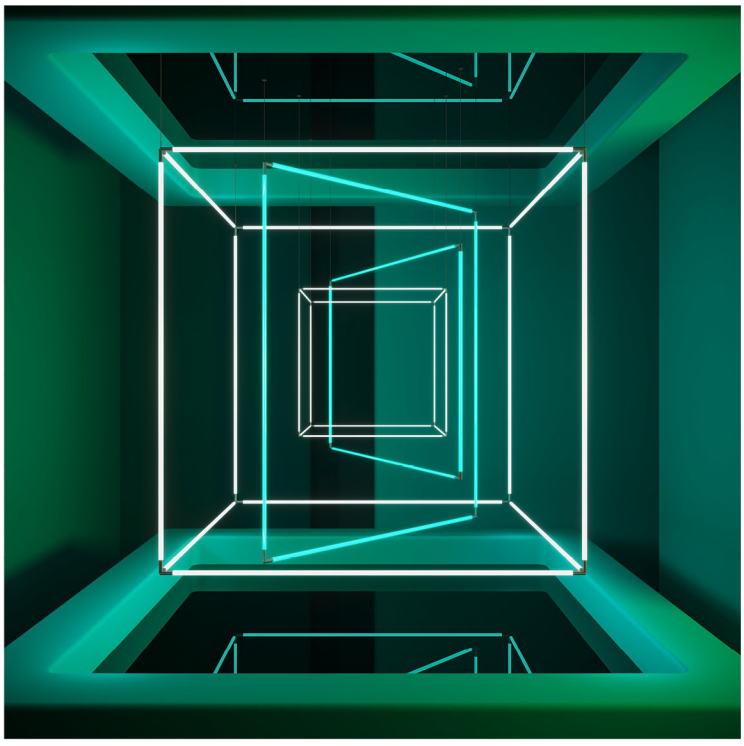

Tankerton Works,
12 Argyle Walk,
London, WC1H 8HA

Fabricate.

www.fabricate.lighting
info@fabricate.lighting
T: 020 3869 1530

STRUCTURES
SCULPTURE PYRAMID

FEATURES

- Explore 3D installations with Bespoke sculptures.
- Customised shape according to your project.
- Stainless steel, aluminium, brass and copper finishes.
- Fully homogeneous and uniform diffuser appearance.
- Range of light outputs available.
- 50,000+ hours life expectancy.
- IP40 up to IP66 protection available.
- Diffuser customisations and optics available.
- Wide selection of controls options.

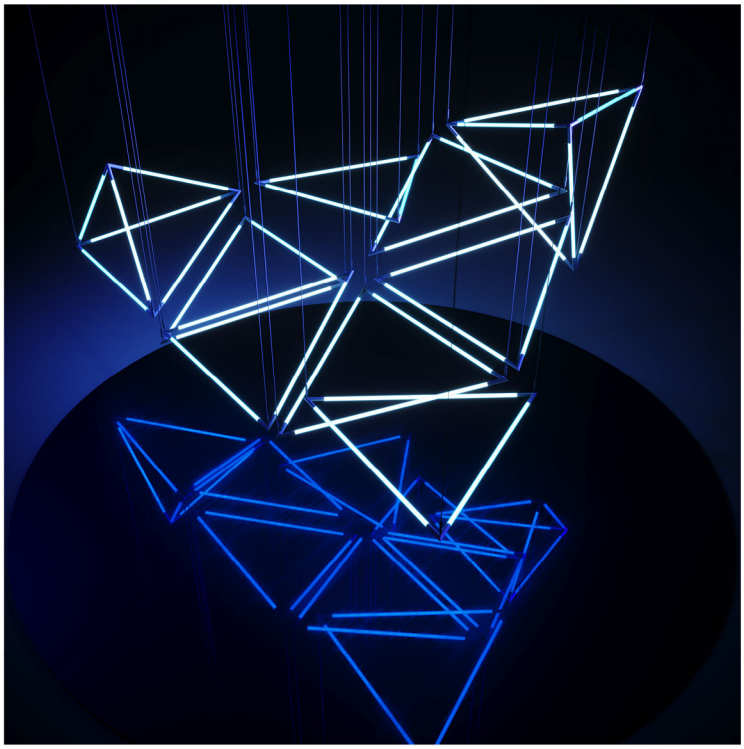

TECHNICAL INFO

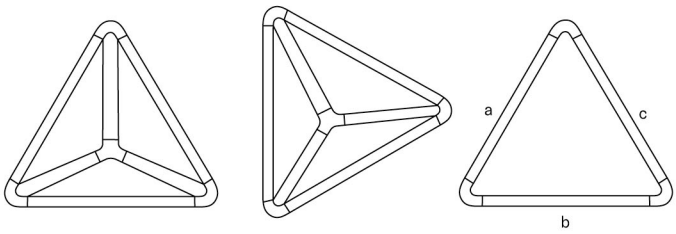

EXAMPLE ORDER CODE

FAB-S-X-500-500-500-40-2700-SWITCHED

DIM A	DIM B	DIM C	IP RATING	LIGHT COLOUR	CONTROL
500	500	500	40	2700	Switched
1000	1000	1000	44	3000	Dali
1500	1500	1500	64	4000	DMX
2000	2000	2000	65	RGB	Art-Net
2500	2500	2500	66	RGBW	Fab Content
3000	3000	3000		RGBWW	
				RGBCW/WW	
SITE	SITE	SITE			

Tankerton Works,
12 Argyle Walk,
London, WC1H 8HA

Fabricate.

www.fabricate.lighting
info@fabricate.lighting
T: 020 3869 1530

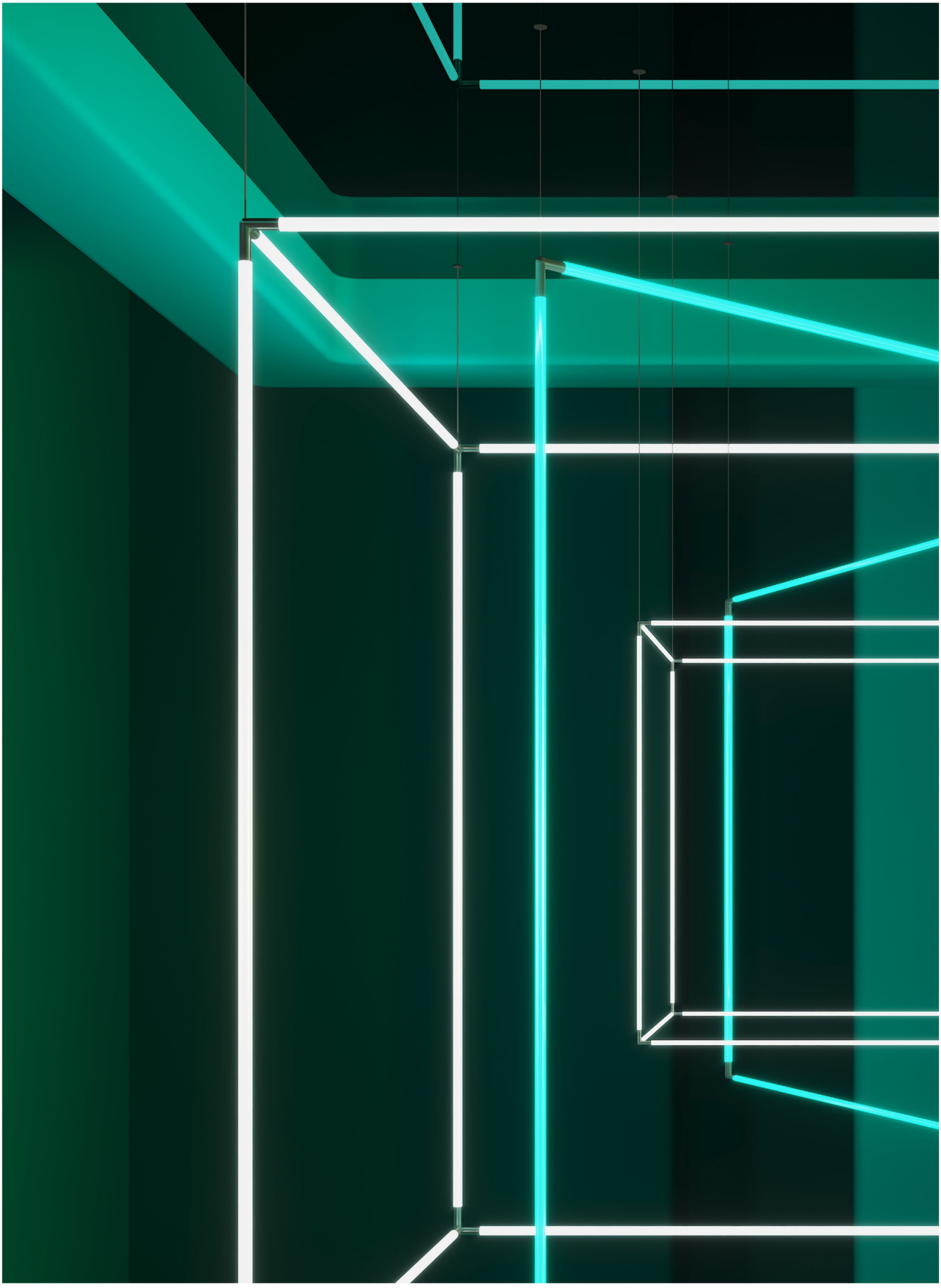

THANK YOU

Tankerton Works,
12 Argyle Walk,
London, WC1H 8HA

www.fabricate.lighting
info@fabricate.lighting
T: 020 3869 1530